

KMC
MOTORCYCLE
COMPONENT
ISO 9001 CERTIFIED

KMC
MOTORCYCLE COMPONENT

www.kmc-international.com



Standard Chain

Model	Pitch	Roller Link Width (Min)	Roller Dia. (Max)	Pin Link Plate Thickness	Roller Link Plate Thickness	Roller Link Plate Height (Max)	Pin Dia. (Max)	Over-all Width Riv (Max)	Ave. Tensile Strength
Symbol	P	W	D	T1	T2	H	d	F	
Unit	mm	mm	mm	mm	mm	mm	mm	mm	kgf
420	12.7	6.35	7.77	1.5	1.5	12.00	3.97	14.90	1833
428	12.7	7.85	8.50	1.5	1.5	12.35	4.47	16.15	1920

MOTORCYCLE DRIVE CHAIN





For reducing chain elongation, solid bushing with a seamless and extremely round surface is applied.
It performs 2 to 4 times of life of standard drive chain.

Solid Bushing Chain

Model	Pitch	Roller Link Width (Min)	Roller Dia. (Max)	Pin Link Plate Thickness	Roller Link Plate Thickness	Roller Link Plate Height (Max)	Pin Dia. (Max)	Over-all Width Riv (Max)	Ave. Tensile Strength
Symbol	P	W	D	T1	T2	H	d	F	
Unit	mm	mm	mm	mm	mm	mm	mm	mm	kgf
420JB	12.7	6.35	7.77	1.5	1.5	12.00	3.97	14.90	1925
428DX	12.7	7.85	8.50	1.5	1.5	12.35	4.47	16.50	1920
428HX	12.7	7.95	8.50	2.0	2.0	12.35	4.51	18.90	2380
520	15.875	6.40	10.16	2.0	2.0	14.90	5.10	16.90	2890
530	15.875	9.60	10.16	2.0	2.0	14.90	5.10	20.05	2910

Heavy Duty Chain

Model	Pitch	Roller Link Width (Min)	Roller Dia. (Max)	Pin Link Plate Thickness	Roller Link Plate Thickness	Roller Link Plate Height (Max)	Pin Dia. (Max)	Over-all Width Riv	Ave. Tensile Strength
Symbol	P	W	D	T1	T2	H	d	F	
Unit	mm	mm	mm	mm	mm	mm	mm	mm	kgf
415H	12.7	4.80	7.77	1.5	1.5	12.00	3.97	13.00	1790
420H	12.7	6.35	7.77	2.0	2.0	12.00	3.97	16.80	2130
428H	12.7	7.95	8.50	1.8	1.8	12.35	4.47	17.50	2256
428MH	12.7	7.95	8.50	2.0	2.0	12.35	4.52	18.90	2300
428HG	12.7	7.95	8.50	2.0	2.0	12.35	4.51	18.90	2380
520H	15.875	6.40	10.16	2.35	2.35	14.90	5.15	18.30	3120
530H	15.875	9.60	10.16	2.35	2.35	14.90	5.15	21.60	3150

This is designed for high impact applications. All material and heat treatment are carefully calibrated to maximize the tensile strength and stretch resistance to reach its superior overall performance. This heavy duty chain is suitable for desert riding where fine sand could be detriment to O-Ring.

O-Ring Chain

Model	Pitch	Roller Link Width (Min)	Roller Dia. (Max)	Pin Link Plate Thickness	Roller Link Plate Thickness	Roller Link Plate Height (Max)	Pin Dia. (Max)	Over-all Width Riv	Ave. Tensile Strength
Symbol	P	W	D	T1	T2	H	d	F	
Unit	mm	mm	mm	mm	mm	mm	mm	mm	kgf
428UO	12.7	7.85	8.51	1.8	1.8	12.10	4.51	20.10	2400
520UO	15.875	6.25	10.16	2.2	2.2	14.70	5.24	20.65	3600
525SUO	15.875	7.85	10.16	2.2	2.2	14.70	5.24	22.35	4100
530SUO	15.875	9.40	10.16	2.4	2.4	15.25	5.35	24.70	4500

An O-Ring sealed bearing area is to ensure that the pin and bushing are interacting with each other within the seal environment where pin is bathed with grease at all time to reduce the noise and buffer, and damp the chain impact between pin and bushing. This O-Ring chain has 5 to 10 times of life of standard drive chains.

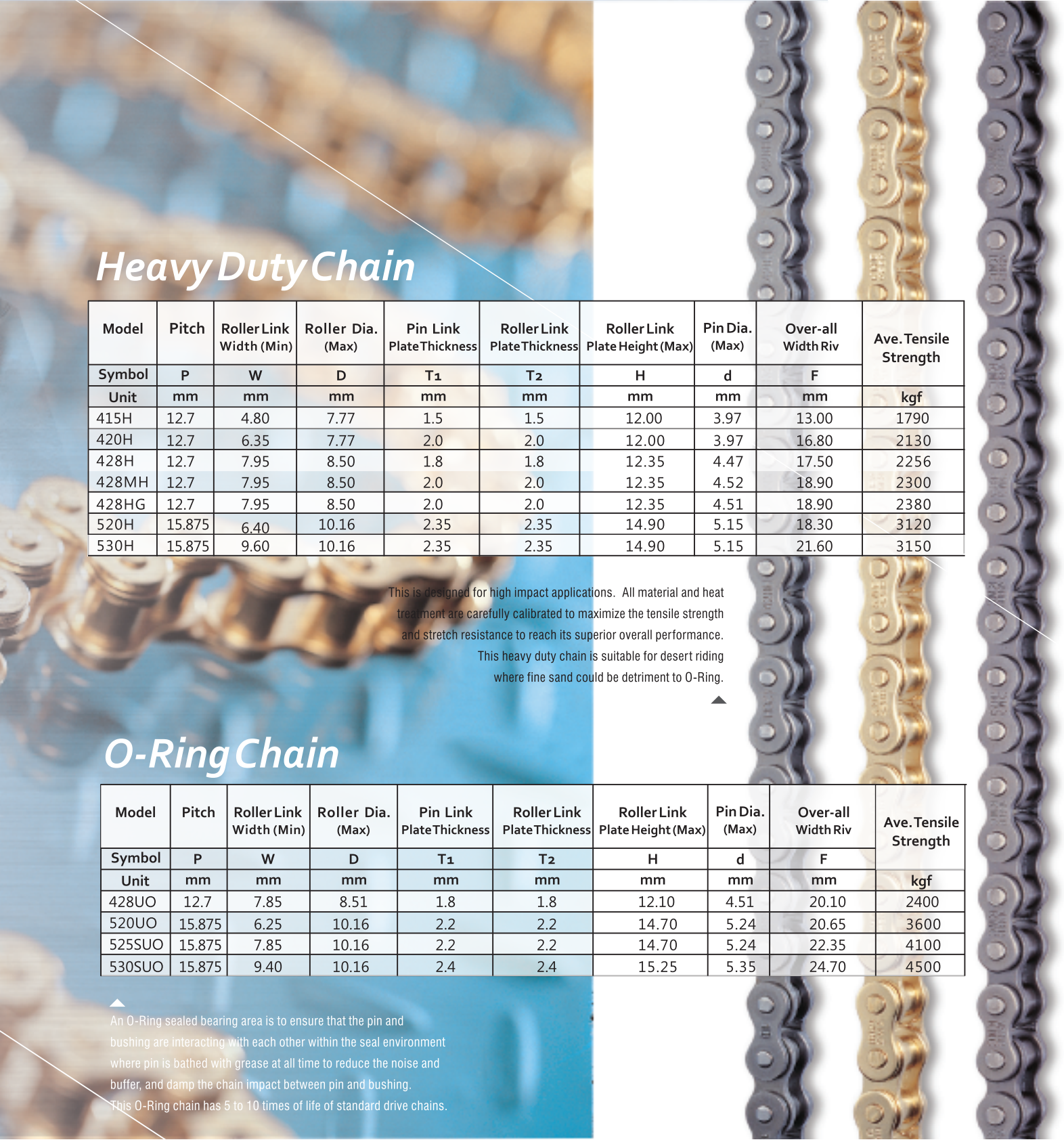

420H 428H 428HG

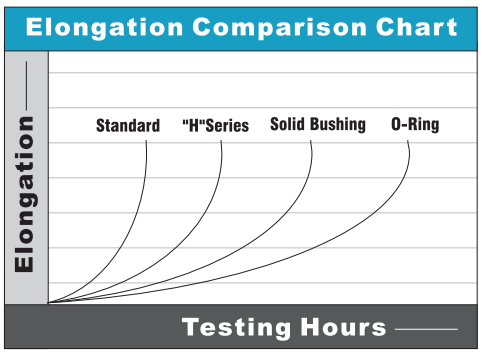

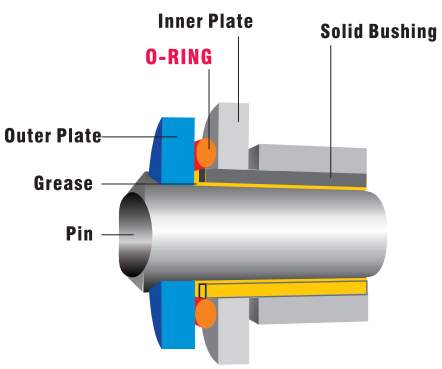





TRANSMISSION KIT

Through the perfect combination of sprocket & driving chain, KMC creates a new energy on the KIT set to push the motorcycle power & life to the limit.

The Application Chart

Chain	Front Sprocket	Rear Sprocket	Applied Motorcycle
428*100L	14T	36T	HONDA DREAM 110/WAVE 110
428*106L	14T	36T	HONDA SUPRA FIT NEW
420JB*108L	14T	37T	HONDA FUTURE
420*104L	14T	41T	HONDA CD70
428*100L	15T	38T	HONDA CG125
428*104L	15T	36T	YAMAHA JUPITER-Z
428*98L	15T	35T	YAMAHA SIRIUS
428*114L	15T	39T	YAMAHA NEW LC135
428*102L	14T	35T	SUZUKI NEW SMASH
530*102L	28T	32T	THREE WHEELER RICKSHAW

Motorcycle CamChain

Standard CamChain

Model	Pitch	Roller Link Plate Thick	Bushing Dia. (Max)	Pin Link Plate Thickness	Roller Link Plate Thickness	Roller Link Plate Height (Max)	Pin Dia. (Max)	Over-all Width Riv (Max)	Ave. Tensile Strength
Symbol	P	W	D	T1	T2	H	d	F	
Unit	mm	mm	mm	mm	mm	mm	mm	mm	kgf
25	6.35	3.18	3.30	0.7	0.7	5.90	2.30	7.70	450
25HIB	6.35	3.18	3.30	1.0	1.0	5.35	2.00	8.80	470
25H	6.35	3.18	3.30	1.0	1.0	5.90	2.30	8.90	580
25HD	6.35	3.18	3.30	1.0	1.0	5.95	2.31	8.90	600
25HB	6.35	3.18	3.30	1.0	1.5	5.95	2.31	9.90	650

This chain is designed for very high speed running within protected environment to properly regulate valve open and close according to the ignition timing.
It is a chain with high fatigue strength, high stretch resistance, and low noise for 4-stroke engine timing application.

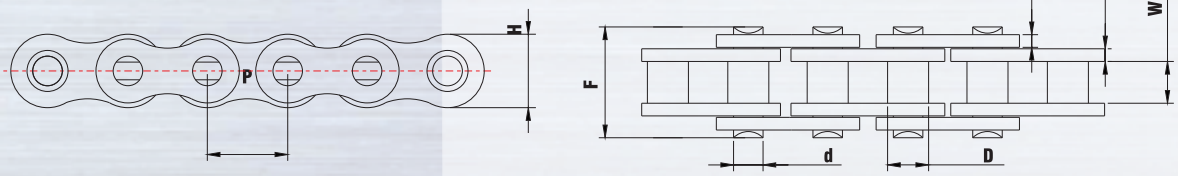

Silent Chain

Model	Pitch	Roller Link Width (Min)	Outer Plate Thickness	Inner Plate Thickness	Inner Plate Height (Max)	Link Height	Pin Dia. (Max)	Over-all Width Riv (Max)	Ave. Tensile Strength
Symbol	P	W	T1	T2	H	H1	D	F	
Unit	mm	mm	mm	mm	mm	mm	mm	mm	kgf
2023LNIP	6.35	3.1	0.7	1.0	6.70	2.80	2.42	6.10	600
2023LN	6.35	3.1	0.7	1.0	6.70	2.80	2.42	6.10	600
2034LN	6.35	5.1	0.7	1.0	6.70	2.80	2.42	8.25	800
2023LW	6.35	3.1	0.7	1.0	6.72	2.75	2.72	6.10	560
2034LW	6.35	5.1	0.7	1.0	6.72	2.75	2.72	8.25	720



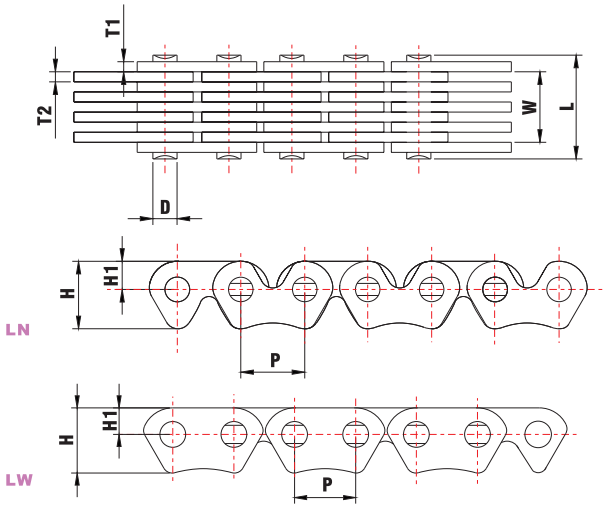

KMC silent chain is equipped with centerless pins and special shape plates to minimize the noise which's lower than standard cam chain. Besides, its tensile strength, stretch resistance and durability are recommended for higher performance engines.

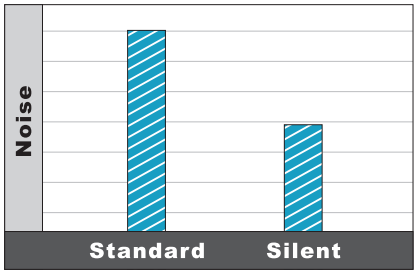

KMC AWARDS

KMC is a genuine parts supplier!
We insist on producing high quality motorcycle components with superior materials and advanced technics.
KMC quality has been approved by the leading brands of motorcycle manufacturers in the world,
like Honda, Yamaha, Suzuki, Kawasaki,...etc, and we are rewarded every year from them!



KMC Motorcycle Component's AWRAD LIST 2011 ~ 2015

2015 Outstanding Delivery Supplier Award/ HONDA
2015 Quality Improvement Award/ YAMAHA
2015 VA-VE Activity Award/ SUZUKI
2015 Superior Performance Award/ /SYM
2014 Outstanding Delivery Supplier Award /HONDA
2013 Outstanding Quality Supplier Award /HONDA

2012 Best Improvement Supplier Award /HONDA
2012 Excellent Quality Performance Award/ KAWASAKI
2012 Best Performance Supplier Award / VMEP
2011 Best Performance Supplier Award / HONDA
2011 Excellent Quality Performance Award/ KAWASAKI

KMC Headquarters
KMC (KUEI MENG) INTERNATIONAL INC.
8F-5, NO.425, JHONGHUA RD., YONGKANG DISTRICT, TAINAN CITY 710, TAIWAN (R.O.C.)
Website: www.kmc-international.com
Email: mcsales@kmc-international.com
TEL: 886-6-3037111 FAX: 886-6-3037333

KMC CHAIN (VIETNAM) CO., LTD.
AMATA MODERN IND. PARK, LONG BINH WARD, BIEN HOA CITY, DONG NAI PROVINCE, VIETNAM
Email: kmcvnsales@kmcchain-vn.com
TEL: 84-61-3936531 FAX: 84-61-3936085

PT KUEI MENG CHAIN INDONESIA
JL. KAWASAN INDUSTRI TERPADU INDONESIA CHINA KAV. 19-4, DESA NAGASARI, SERANG BARU
BEKASI REGENCY, WEST JAVA, INDONESIA 17330
Email: marketing@kmcchain-id.com
TEL. 62-21-22157998 / 22157999